LITECRAFT®

OutLED AT10

Bedienungsanleitung
User Manual

Safety Notes

- Each person which is responsible for the installation, the use or service of this unit must be:
  - qualified
  - has to follow the instructions in this manual.

WARNING!
Be careful when using the device. You risk an electrical shock from high voltage, if you touch the wires!
- The device has left our company in manufacturer proofed state. To maintain this status and to ensure a permanent safe operation, it is absolutely necessary to follow the safety instructions and warnings in this manual.

IMPORTANT!
Errors, caused by not following these instructions are not covered by the warranty. The manufacturer will not accept liability for any resulting defects or problems.
- Keep the unit away from radiators or other heat sources!
- If the unit has been exposed to tremendous temperature changes (e.g. after transportation), do not turn it on immediately. The resulting condensation could damage the unit. Don`t switch unit on until the device reaches room temperature.
- This device belongs to protection class I. Therefore, it is imperative that the green/yellow wire is connected to the earth contact of the plug. The electrical connection must be made by a qualified person.
- Make sure that the cable has never been squeezed or damaged by sharp objects. Check the device and the cables regularly.
- If the cable is damaged, it must be replaced immediately by the manufacturer, its service agent or a qualified person in order to avoid danger.
- Lenses, glasses or UV filters must be replaced if they are visually damaged, or their effectiveness is impaired, e.g. by broken glass or by deep scratches.
- Ensure that wires never come in contact with other wires! Handle the power cord and all connections with caution!
- Make sure that the line voltage is not higher than the voltage specified in this manual.
- Disconnect the unit from the AC mains when it is not in use or when cleaning it. Disconnect the connection only by pulling the cable plug.
- Using the fixture for the first time, can result in light smoke and odors. This is a normal process and does not constitute a defect.

RISK OF BURNS!
Do not touch the unit during operation! The housing may reach high temperatures.

RISK TO HEALTH!
Never look directly into the light source. Especially epileptics risk an epileptic shock! Disconnect the unit from the AC mains when not in use or when cleaning it.
- Defects caused by modifications of the device by unqualified handling or an unqualified person are not covered by the warranty.
- Keep the product away from children and unskilled people.
- There are no wear parts in the device. Maintenance and service must be performed only by an authorized service partner.

Designated Use

This product is a spotlight, which is designed only for professional use on stages, discotheques, theatres, etc. This product is approved for mains connection up to 240 VAC and designed for outdoor use.
- Please avoid any kind of shocks and outer actions during its installation or transportation.
- Take care of too high ambient temperature, humidity and dust when choosing the installation location. Assure that all cables are fixed. Incorrect operation may lead to danger.
- Image shows the minimum distance to illuminated objects. Minimum distance between fixture and illuminated surface is 0,3 meters
- Assure that the area below the mounting position of the fixture is roped in while mounting, dismantling and service.
- The spotlight itself and its accessories like color frame an barndoors have to be safed with a suitable safety chain.
- Assure that the maximum ambient temperature is never exceeded.
- Do not put the fixture in operation before you are familiar with its functions. Keep the product away from children and unskilled people.

Installation

- There are specific regulations like BGV C1 (old VBG 70) or country related regulations which need to attend during the installation. The installation has to be handled by skilled persons only!
- Suspension device hast to be built and calculated in order to handle up to 10 times its specific load limit over a time of one hour without permanent or harmful deformation.
- Installation has to be done with a separate, independent suspension device like a safety chain. A second suspension device has to be built in order to assure that in case of error no part of an installation can fall off.
- Trepassing the danger zone below the installation during the assembling is prohibited.
- Installer has to take care of all safety and machinery installations are approved by authorized persons before first operation or after changes before restarting.
- Installer has to take care of all safety and machinery installations are approved by skilled persons at least once a year.
- Installer has to take care of all safety and machinery installations are approved by authorized persons at least every four years during the acceptance inspection.
- Spotlight should ideally installed outside peoples lounge area.

ATTENTION!
Installation overhead needs a high level of experience. This includes (but is not just limited to) calculation and definition of load capacity, used installation material and regular safety inspections of used material and the fixture itself. Never try to do the installation by yourself if you are not qualified, instead you have to instruct a skilled installer. Inappropriate installations can cause injuries and/or damage of property.

- Spotlight has to be installed outside areas where people can touch it.
- Professional truss system or similar licensed suspension systems have to be used if the spotlight is used in suspension from ceiling or other constructions. Spotlights can never be installed freely suspended!

ATTENTION!
Spotlights can cause injuries when fall off. If you are not trained in questions of safety for the different kinds of installation do NOT install the spotlight!

- Assure that the mounting surface can hold at least ten times the point load of the spotlight before installing the fixture.

ATTENTION!
Assure the specified safety distances to flammable material.

- Attach the spotlight with its yoke and the use of a suitable hook/clamp to your truss system. The therefor used opening has a diameter of about 12 mm. According to your installation also similar but approved suspension devices are possible.
- When installing the spotlight overhead make sure to safe the fixture by a safety chain which is specified at least with a load limit of 12 times of the spotlights weight. Only safety chain with approved connective can be used. Attach the safety chain to its designated opening and attach it to the truss system or a similar and safe attachment point. Assure to close the fasteners as specified.
- To adjust the angle of the fixture open the locking screw, set the fixure in its position and close it by hand.

Electrical Connection

- Connection to the mains is only allowed by skilled persons.
- Before connecting the fixture to the mains, assure that the specifications are corresponding.
- Electrical grounding has to be used in the whole installation!

ATTENTION!
Installation has to be approved by an authorized person before first operation!

Cleaning and Maintenance

- Installer has to take care of all safety and machinery installations are approved by skilled persons at least once a year.
- Installer has to take care of all safety and machinery installations are approved by authorized persons at least every four years during the acceptance inspection. Following points need to receive special attention:
- All screws used for mounting the fixture or parts of it need to be proof and must not show corrosion.
- Housing, suspension device and installation site (ceiling, suspension, truss) must not show deformation.
- All power cords must not show any damage, aging (for example porous wires) or sediments. Other, to the location related and usage aligned regulations will be observed by the skilled person and safety defects will be fixed.

ATTENTION!
Make sure that the fixture is disconnected from mains during all maintenance! It is important to unplug mains connector!

- The fixture must be regularly cleaned from dirt and dust. Only use a wetted, lint-free cloth for cleaning the fixture. Never use alcohol or any kind of solvent for cleaning.
- Inside the fixture there are no parts which need maintenance. Maintenance & service must be done by authorized dealers only.
- Only use original spare parts!

ADVICE!
If you have further questions, your local dealer will be happy to help you.

Operation

- This device has several DMX- and Stand-Alone-Modes. In DMX-mode, multiple devices can be connected and controlled by a controller. The device accepts the settings of the DMX-controller, as soon as the corresponding start address is set.
- Slave mode:
  Connect the DMX-output of the master device (XLR female) to the DMX-input of the slave device (XLR male). Set the slave device to DMX-mode DMX-4CH with the DMX-start address 001 (display shows: DMX-4CH/DMX 001). The slave device accepts all settings of the master device (such as color macro, programm, programm speed, color set).
- Display description:
  The display shows the different DMX-modes & the DMX-start address or color macro, programm, programm speed, color set; the first line shows the mode, the second line the corresponding value. If a DMX-mode is choosen, but actually there is no DMX-signal present, the display flashes and shows NO SIGNAL.
- Button description:
  Press the MODE button repeatedly to select the mode. Press the UP or DOWN button to set the DMX-start address or any of the pre-programmed modes or the speed values. Use the UP button to increase the value. Use the DOWN button to decrease it.

NOTE!
If you hold the UP or DOWN button for longer than 3 seconds, the value changes faster. The device has an automatic storage for all settings. When you turn the device off and on again, it works with the previously set values

WARNING!
This fixture is using a temperature-sensor used to protect internal electronic and LEDs.

- If the display shows “COLD” the ambient temperature is too low. (-20° C). Please wait until display comes back to its normal state! (mode and value display)
- If the display shows “HOT OFF” or “HOT LOW” the internal temperature reaches a too high level. You can choose between two functions in the menu called “SAFETY”. The function “HOT OFF” switches off LEDs if the internal temperature reaches a too high level. The function “HOT LOW” reduces the LED driving about 25% if the internal temperature reaches a too high level. As soon as the temperature reaches the normal level, the unit comes back to its normal state! (mode and value display).
- If the display shows “HEAT OFF” the internal temperature reaches a too high level. The LEDs will be switched off for safety reasons. Please wait until display comes back to its normal state (mode and value display).

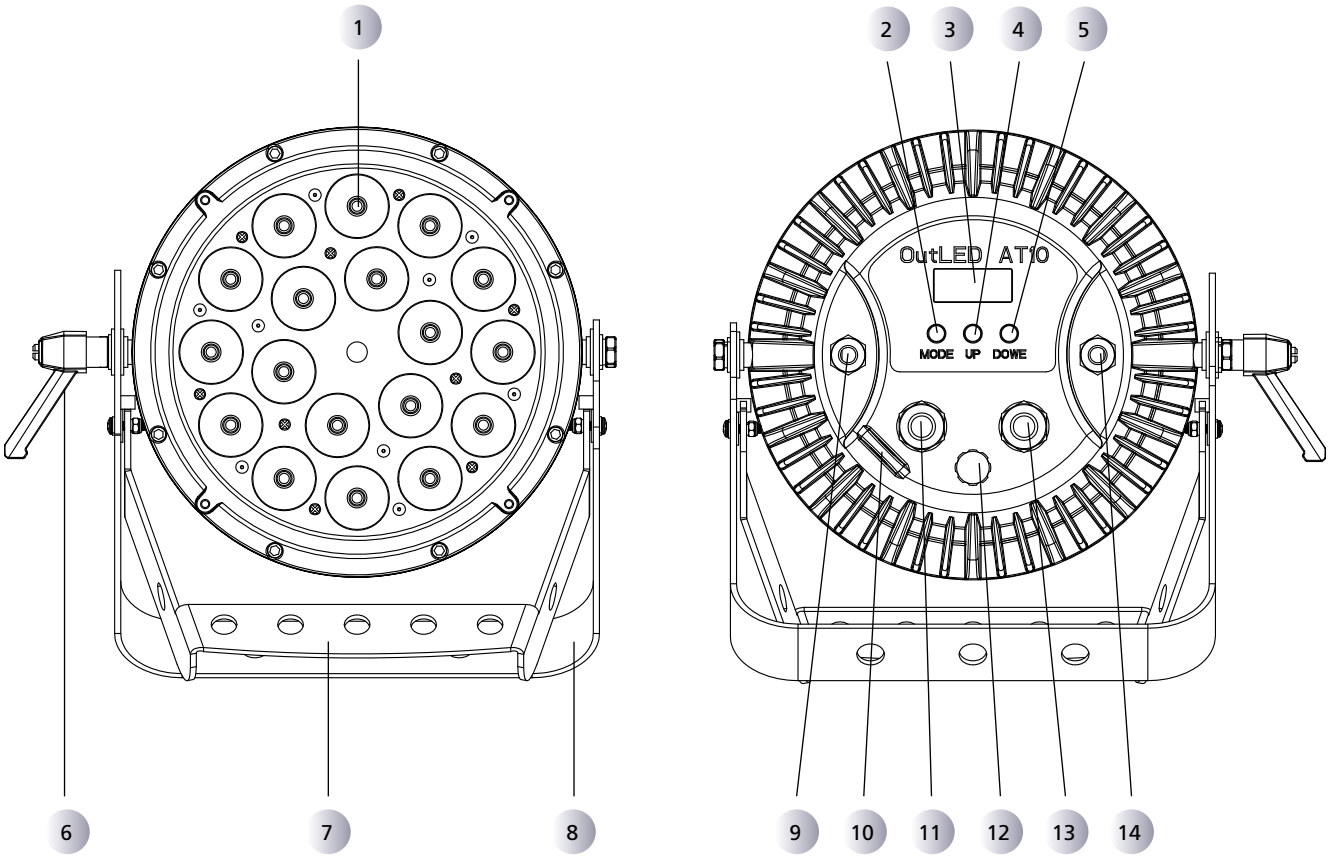

1	LED-Lensset	8	Y-Yoke
2	Mode-Button	9	DMX-Output 5 pin
3	LC-Display	10	Safety attachement point
4	Up-Button	11	Mains-Output
5	Down-Button	12	Air-vent
6	Locking screw	13	Mains-Input
7	Floor mounting yoke (folding)	14	DMX-Input 5 pin

Display-Mode

Display-Mode	display	function
	LITECRAFT SW.V *.*	shows the software version direct after switching on the unit *.* = software-version
	DEF. SET YES	alle settings will be set to factory defaults (DMX-4CH, address 001)
	DEF. SET NO	all settings (DMX mode/macro etc.) will not be changed – this menue disappears automaticly after 5 seconds
	FixHours ***** h	*****= fixture working hours
	SAFETY HOT OFF	LEDs will switch off due to too high internal temperature
	SAFETY HOT LOW	LEDs will reduce driving about 25%
	DispPerm ON	display permanent on
	DispPerm OFF	display switches off after 10 s and switches on by pressing any button for at least 3 s

DMX-Mode

DMX-Mode

mode	display	function
1 channel mode	DMX-1CH DMX *** *** = DMX adress	ch1 = color macro mode (43 colors + black)
2 channel mode	DMX-2CH DMX *** *** = DMX adress	ch1 = color macro mode (43 colors + black) ch2 = dimmer
3 channel mode	DMX-3CH DMX *** *** = DMX adress	ch1 = dimmer red ch2 = dimmer green ch3 = dimmer blue
4 channel mode	DMX-4CH DMX *** *** = DMX adress	ch1 = dimmer red ch2 = dimmer green ch3 = dimmer blue ch4 = dimmer amber
8 channel mode	DMX-8CH DMX *** *** = DMX adress	ch1 = dimmer red ch2 = dimmer green ch3 = dimmer blue ch4 = dimmer amber ch5 = color macro mode 0-13 no macro 14-255 pre-programmed colors ch6 = strobe/speed 0-15 no strobe 16-255 strobe 16 speed values ch7 = mode 0-35 no function 36-71 automtic ramp up */** 72-107 automatic ramp down */** 108-143 automatic ramp up/down */** 144-179 automatic color mix mode 180-215 random 3-colors * 216-251 random 7-colors * 252-255 audio mode ch8 = dimmer * speed value by channel 6 ** color value by channel 1, 2, 3, 4

Manual-Mode

Manual-Mode	mode	display	function
	color macro mode	ColMacro Macro** ** = pre-programmed colors	choose one of 43 pre-programmed colors + black
	programm mode	ColProgr Prog** ** = pre-programmed chasers	choose one of 6 pre-programmed chasers
	programm speed	ColSpeed Speed** ** = speed value	choose one of 16 speed values for the programm choosed in programm mode
	color set red	ColSet Red *** *** = color value red	256 DMX-steps to set color red
	color set green	ColSet Green *** *** = color value green	256 DMX-steps to set color green
	color set blue	ColSet Blue *** *** = color value blue	256 DMX-steps to set color blue
	color set amber	ColSet Amb *** *** = color value amber	256 DMX-steps to set color amber

Macro-Value Overview

	value red	value green	value blue	value amber
black	0	0	0	0
macro 1	0	0	128	0
macro 2	0	0	192	0
macro 3	0	0	255	0
macro 4	0	128	0	0
macro 5	0	128	128	0
macro 6	0	128	192	0
macro 7	0	128	255	0
macro 8	0	255	0	0
macro 9	0	255	128	0
macro 10	0	255	192	0
macro 11	0	255	255	0
macro 12	128	0	0	0
macro 13	128	0	128	0
macro 14	128	0	192	0
macro 15	128	0	255	0
macro 16	128	128	0	0
macro 17	128	128	128	0
macro 18	128	128	192	0
macro 19	128	128	255	0
macro 20	128	255	0	0
macro 21	128	255	128	0

	value red	value green	value blue	value amber
macro 22	128	255	192	0
macro 23	128	255	255	0
macro 24	255	0	0	0
macro 25	255	0	128	0
macro 26	255	0	192	0
macro 27	255	0	255	0
macro 28	255	128	0	0
macro 29	255	128	128	0
macro 30	255	128	192	0
macro 31	255	128	255	0
macro 32	255	255	0	0
macro 33	255	255	128	0
macro 34	255	255	192	0
macro 35	255	255	255	0
macro 36	255	0	0	255
macro 37	0	255	0	255
macro 38	0	0	255	255
macro 39	0	0	0	255
macro 40	255	255	0	255
macro 41	255	0	255	255
macro 42	0	255	255	255
macro 43	255	255	255	255

Beam Specs

beam spread chart 25°

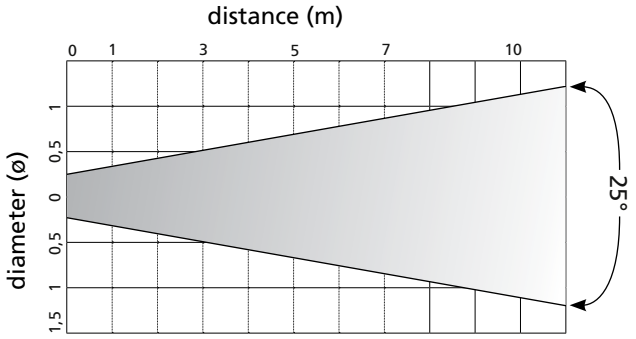

beam spread chart 15°

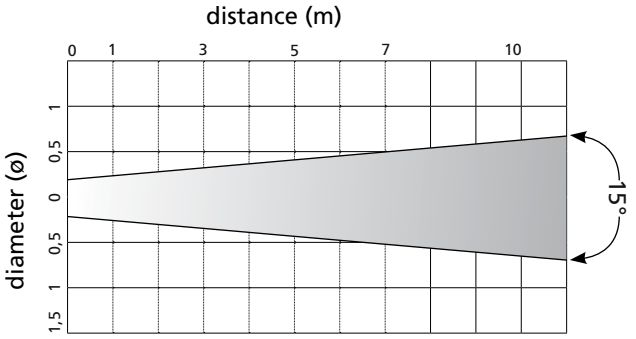

		1 m	2 m	3 m
25° (Standard)	red	4.384 lx	1.075 lx	501 lx
	green	6.187 lx	1.631 lx	763 lx
	blue	990 lx	266 lx	123 lx
	amber	4.853 lx	1.211 lx	515 lx
	white total	14.140 lx	3.585 lx	1.646 lx

		1 m	2 m	3 m
15° (Option)	red	6.950 lx	1.878 lx	862 lx
	green	8.878 lx	2.394 lx	1.586 lx
	blue	1.380 lx	350 lx	166 lx
	amber	8.730 lx	2.114 lx	899 lx
	white total	21.340 lx	5.980 lx	2.489 lx

Technical Specification

voltage: 100-240 V, 47-63 Hz

power consumption: 0,6 A @ 230 V

measurements: 28,7 x 21,9 x 30,8 cm

DMX-Channels: 1 / 2 / 3 / 4 / 8

weight: 6,0 kg

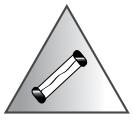

fuse: no external fuse

ip rating: IP 65

optics: 25° KHATOD, Italy